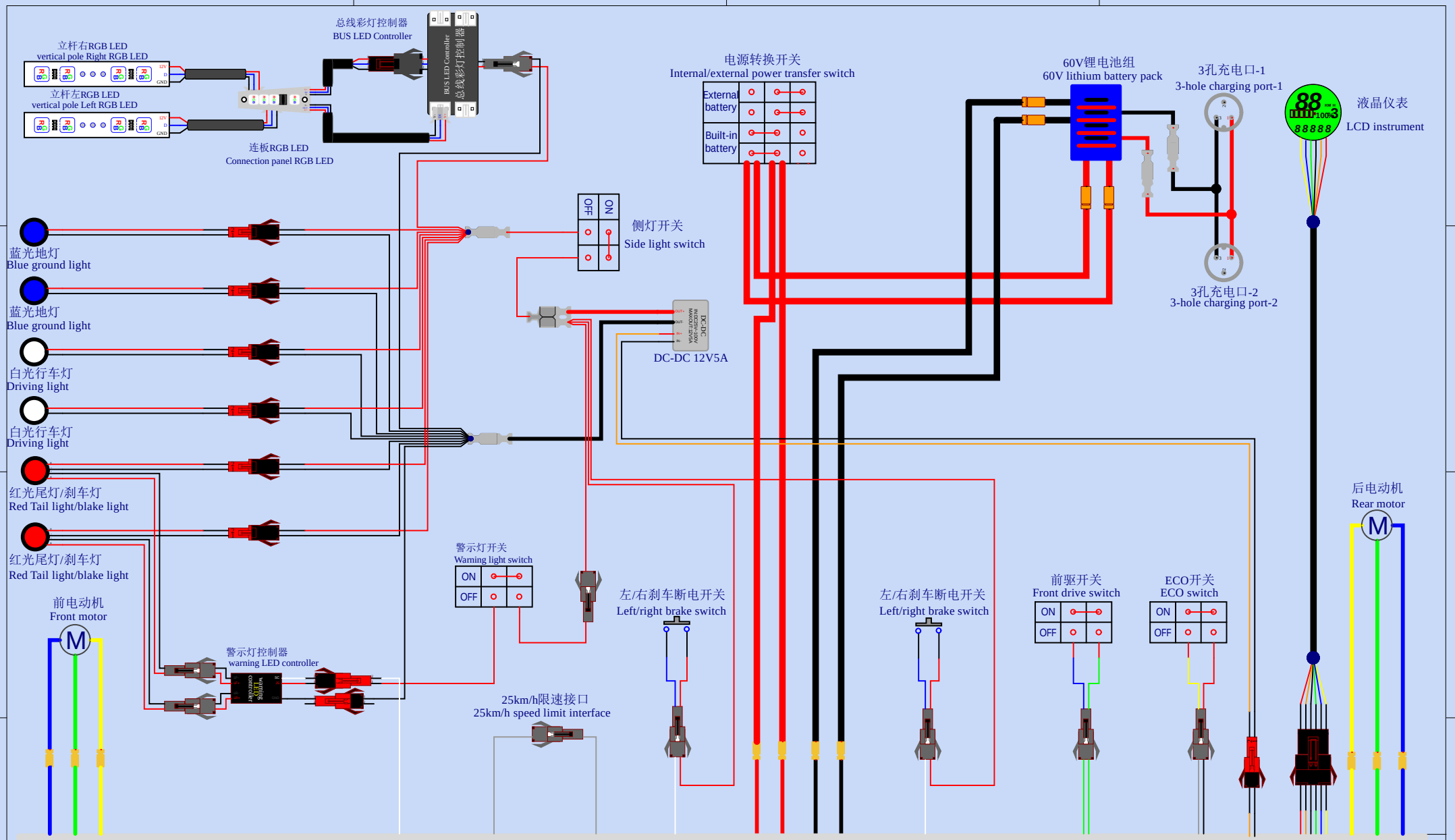

DT-VICTOR 型二合一直流无刷电机控制器

DT-VICTOR type two-in-one brushless motor controller

Date:	2022/3/11	Sheet	of
File:	E:\Q\..\DT-VICTOR.SchDoc	Drawn By:	