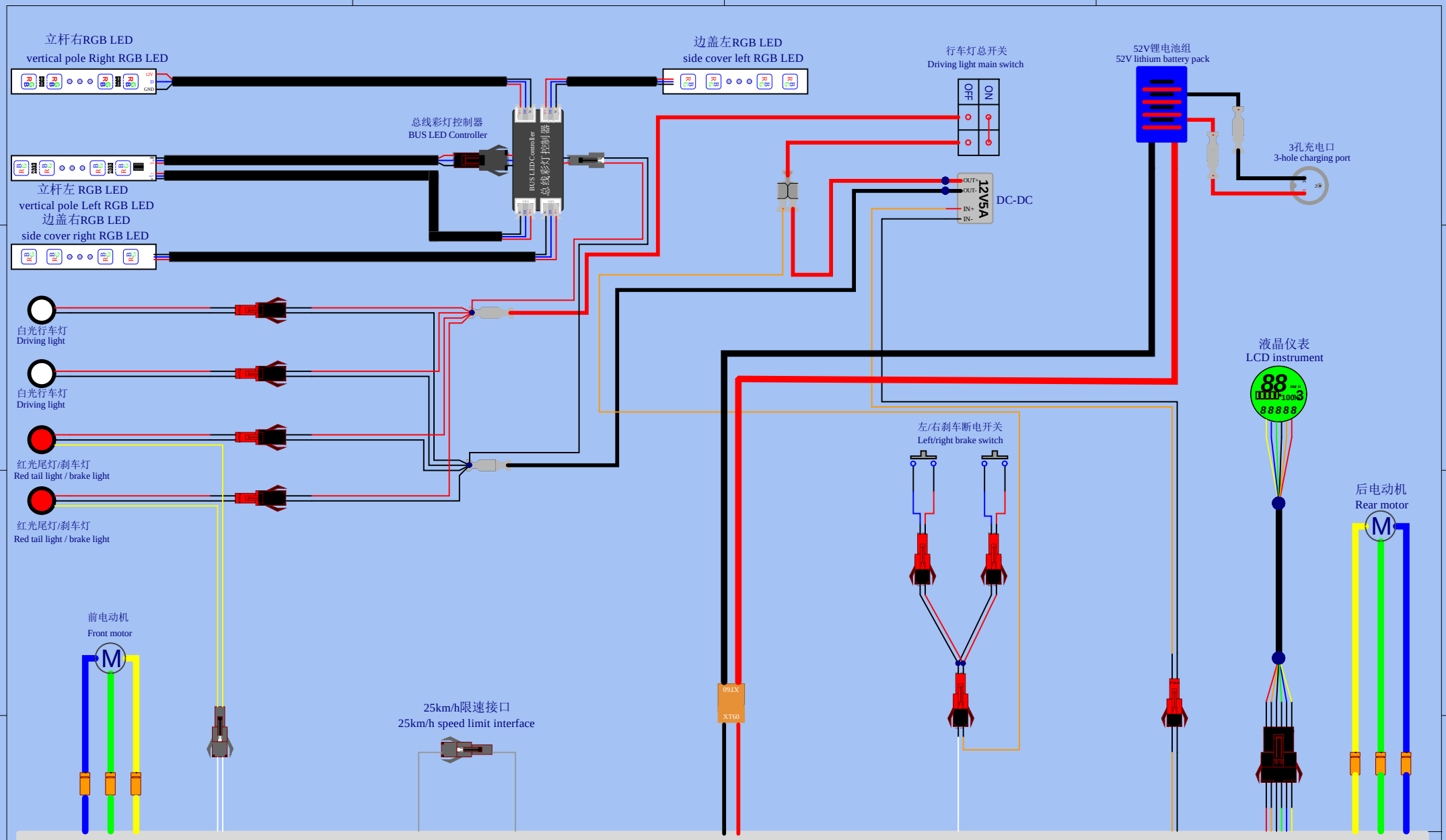

DT-MINI 52V单驱直流无刷电机控制器

DT-MINI 52V single drive brushless motor controller

Date:	2022/3/10	Sheet	of
File:	E:\Q\..\DT-MINI.SchDoc	Drawn By:	